HP SCD 540 RP TRONIC®

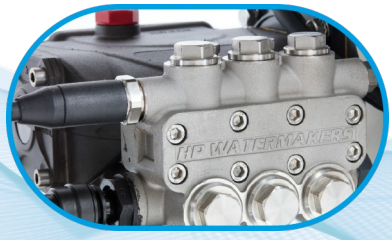

Triplex Pump
(600 hours without maintenance)

Axial Pump
(6000 hours without maintenance)

Part-NET and BiBi® port

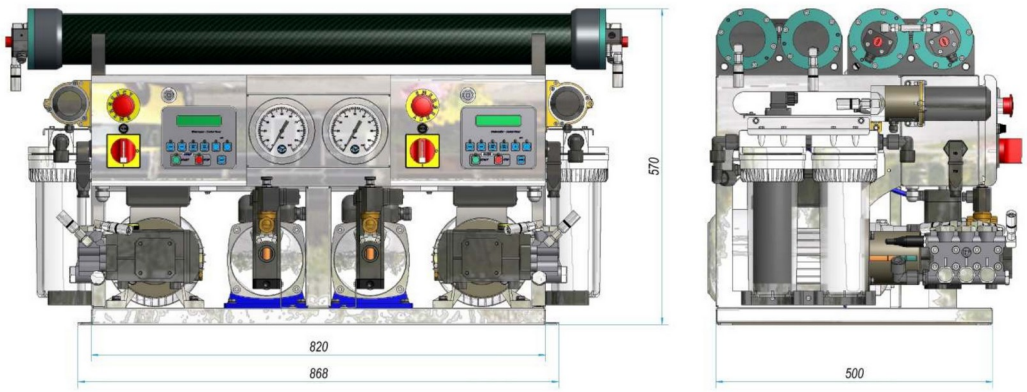

HP SCD 540 RP TRONIC®

TECHNICAL DATA

Production 2 X 270Lt/h - 540 Lt/h

Available Voltages 230V 50Hz – 230V 60Hz – 380V 50Hz – 440V 60 Hz

THIS UNIT IS COMPOSED AS FOLLOWS:

- 2 X Remote Control Panel (HP RCP 1000)
- 2 X 3-WAY AUTOMATIC flushing valve HP VAL (Patented)
- 2 X AUTOMATIC pressure regulation valve HP RP TRONIC (Patented)
- 2 X Feed pump AISI 316 LOWARA 2HMS3
- 2 X High pressure pump AISI 316 – W99
- 4 X Pressure Vessel GRP – 315-40
- 4 X Reverse Osmosis Membrane HYDRANAUTICS - SW30 315-40
- 2 X AISI 316 removable electrical control panel
- 2 X PLC control system – with settable parameters and DIAGNOSTIC SYSTEM*
- 2 X Pressure control system (min 20 – max 60 bar), pump and membrane protection
- 2 X Salinity control system (400uS) with timed alarm and machine shutdown
- 2 X High pressure gauge
- 2 X Pressure sensor
- 2 X Production flow meter
- 2 X Cartridge Pre-Filtration System (Activated carbon + 5 micron protection)

	HP SCD540
Hourly flow rate Lt/h	540
Nominal hourly flow rate Lt/h	664
Daily flow rate Lt/day	12960
Nominal daily flow rate Lt/day	15936
Product conductivity uS	400
Installed power kW	2 x 2,2
Total weight Kg	170

Flow rates are calculated with a TDS of the water to be treated of 35000 ppm at 25°C at 60 Bar

	DIMENSIONS
Width	868 mm
Height	570 mm
Depth	500 mm

	CONNECTIONS
Seawater inlet	2 x 1”
Flushing tank inlet	2 x ½”
Concentrate discharge	2 x ½” - 10 mm
Production	2 x ½” - 10 mm

HP HIGH PRESSURE srl
Via Fratelli Cervi, 16 - 20058
Zibido San Giacomo (MILANO) - ITALY
T. +39 02 90005369
info@hpwatermaker.it
www.hpwatermaker.it

USA Headquarter
FORT LAUDERDALE, USA
fl.office@hpwatermaker.it

Middle East Headquarter
DUBAI, UAE
dubai.office@hpwatermaker.it

South Africa Headquarter
CAPE TOWN, ZA
za@hpwatermaker.it

Indian Ocean Headquarter
MALE, Maldives
maldives@hpwatermaker.it