HP SCA 220 RP TRONIC®

Triplex Pump
(600 hours maintenance-free)

Axial Pump
(6000 hours maintenance-free)

Part-NET and BiBi® port

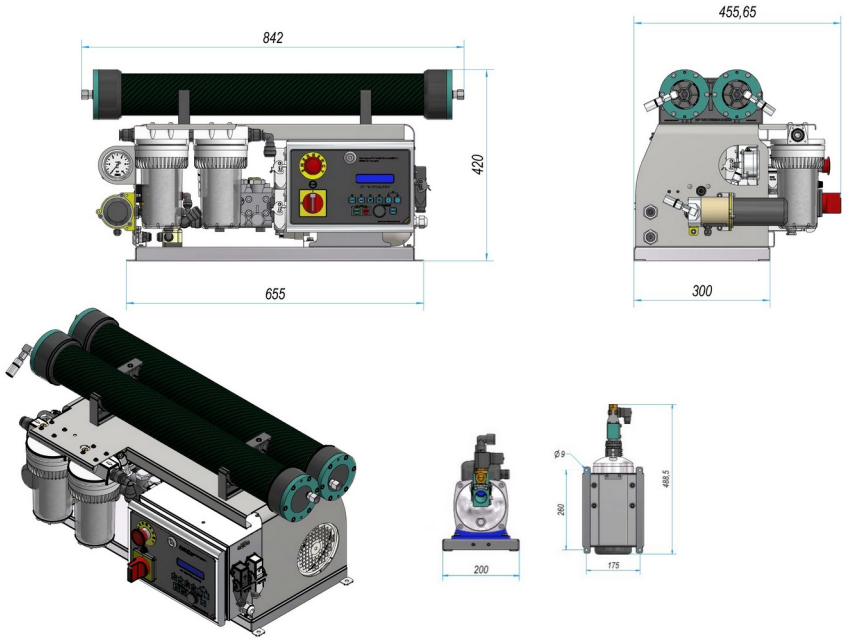

HP SCA 220 RP TRONIC®

TECHNICAL DATA

Production 220 L/h

Available Voltages: 230V 50Hz – 230V 60Hz – 380V 50Hz – 440V 60Hz

THIS UNIT CONSISTS OF THE FOLLOWING:

- 1 X Remote Control Panel
- 1 X HP VAL AUTOMATIC 3-WAY Flushing Valve
- 1 X HP RP TRONIC AUTOMATIC Pressure Regulation Valve (Patented)
- 1 X AISI 316 LOWARA 2HMS3 Feed Pump
- 1 X AISI 316 High Pressure Pump – SW1B1514-000
- 2 X HPWATERMAKERS Carbon Fiberglass Pressure Vessels - 31530
- 2 X HPWATERMAKERS Osmotic Membranes - SW30 31530
- 1 X Removable AISI 316 Electrical Control Panel
- 1 X PLC Control System – with settable parameters and DIAGNOSTIC SYSTEM*
- 1 X Pressure Control System (min 20 – max 60 bar), pump and membrane protection
- 1 X Salinity Control System (400uS) with timed alarm and automatic shutdown
- 1 X High Pressure Gauge
- 1 X Pressure Sensor
- 1 X Production Flow Meter
- 1 X Cartridge Pre-Filtration System (Activated carbon + 5 micron protection)

	HP SCA 220
Hourly Flow Rate L/h	220
Nominal Hourly Flow Rate L/h	240
Daily Flow Rate L/day	5280
Nominal Daily Flow Rate L/day	5760
Product Conductivity uS	400
Installed Power kW	2,2
Total Weight Kg	80

Flow rates are calculated with a feed water TDS of 35000 ppm at 25°C and 60 Bar

	DIMENSIONS
Width	842 mm
Height	420 mm
Depth	455,65 mm

	CURRENT DRAW AT 230V 50HZ
High Pressure Pump	12A
Low Pressure Pump	3A

	CONNECTIONS
Seawater Inlet	1”
Flushing Tank Inlet	½”
Concentrate Discharge	½”
Production	½”

HP HIGH PRESSURE srl
Via Fratelli Cervi, 16 - 20058
Zibido San Giacomo (MILANO) - ITALY
T. +39 02 90005369
info@hpwatermaker.it
www.hpwatermaker.it

USA Headquarter
FORT LAUDERDALE, USA
fl.office@hpwatermaker.it

Middle East Headquarter
DUBAI, UAE
dubai.office@hpwatermaker.it

South Africa Headquarter
CAPE TOWN, ZA
za@hpwatermaker.it

Indian Ocean Headquarter
MALE, Maldives
maldives@hpwatermaker.it